VS-420S Accelerometer

4-20mA velocity output via 2 Pin MS Connector

Key Features

- For use with PLC/DCS systems
- Side entry for easy access
- Customisable features

Industries

Building services, Pulp and Paper, Mining, Metals, Utilities, Automotive, Water, Pharmaceutical

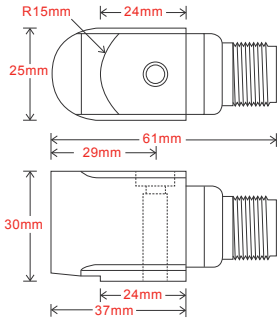

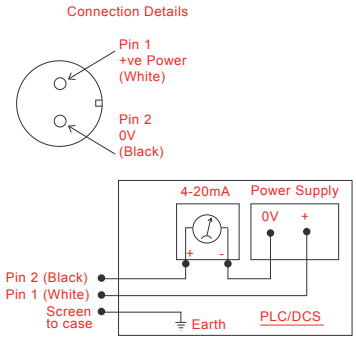

Technical Performance

Mounted Base Resonance	5kHz min
Velocity Ranges	see: 'How To Order' table ±10%
	Nominal 80Hz at 22°C
Frequency Response	10Hz (600cpm) to 1kHz (60kcpm) ± 5% - ISO10816
Isolation	Base isolated
Range	50g peak
Transverse Sensitivity	Less than 5%

Mechanical

Case Material	Stainless Steel
Sensing Element/Construction	PZT/Shear
Mounting Torque	8Nm
Mounting Bolt Provided	see: 'How To Order' table x 30mm long
Weight	185gms (nominal)
Screened Cable Assembly	see: www.IKMinstrutek.no for options
Connector	VS-AA004 - non-booted
	VS-AA053 or VS-0054 - booted
Mounting Threads	see: 'How To Order' table

Electrical

Current Output	4-20mA DC proportional to Velocity Range
Supply Voltage	15-30 Volts DC (for 4-20mA)
Settling Time	1 second
Output Impedance	Loop Resistance 600 Ohms max. at 24 Volts
Case Isolation	$>10^8$ Ohms at 500 Volts

Environmental

Operating Temperature Range	-25 to 90°C
Sealing	IP68
Maximum Shock	5000g
EMC	EN61326-1:2013

Typical Frequency Response

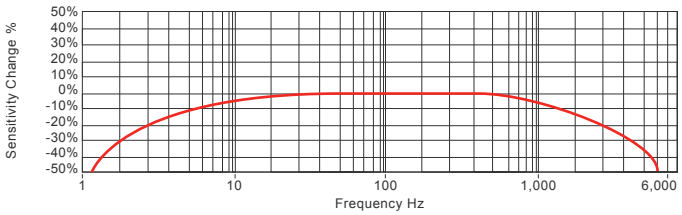

Applications

Fans, Motors, Pumps, Compressors, Centrifuges, Conveyors, Air Handlers, Gearboxes, Rolls, Dryers, Presses, Cooling, VAC, Spindles, Machine Tooling, Process Equipment

Vibration sensor should be firmly fixed to a flat surface (spot face surface may be needed to be produced and cable anchored to sensor body.)

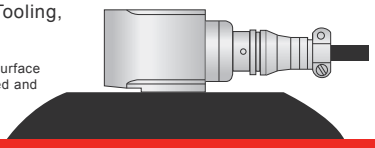

How To Order

Product Prefix
VS - IKM Instrutek

Product Series
420 - Industrial Vibration Sensor

Cable Length (if integral cable)
QXX - length specified in metres

V	S	4	2	0	S	X	X	X	X	X	X	X	X	X	X

Extra Options (if required)
F - Filtered (the frequency range becomes 2Hz-1KHz)
L - 316L Stainless Steel
RT - Temperature Output PT100
S - 90° Side Exit
T - Temperature Output
P - Peak Range
PP - Peak to Peak Range

Velocity Range (RMS unless specified)
010 - 0-10 mm/sec
020 - 0-20 mm/sec
025 - 0-25 mm/sec
050 - 0-50 mm/sec
100 - 0-100 mm/sec

Cable/Connector
01 - PUR
02 - Braided
07 - Silicon
08 - Flame Retardant
50 - 2 Pin MS
54 - M12

Mounting Threads
02 - ¼-28" UNF Male
06 - M6 x 1mm Male
08 - M8 x 1.25mm Male

IKM Instrutek AS

www.IKMinstrutek.no
IKMinstrutek@IKM.no

We reserve the right to alter the specification of this product without prior notice

TS543.2

Safety Integrity Level SIL